HPU1K5 series

1.5kW Fan cooled

AC-DC power supplies

The HPU1K5 is a low profile 1.5kW AC-DC power supply with high power density that is designed for use in a wide range of industrial electronics and medical applications. The HPU1K5 delivers 1.2kW at Low Line and 1.5kW at High Line with three output models 12V, 24V & 48VDC.

The HPU1K5 is supplied with a range of signals and control, self cooling via integral fans and customer mounting options on three faces making it suitable for a variety of enclosures and applications where status reporting and control functions are increasingly required.



Features

- 1.5kW high line 1.2kW low line fan cooled
- Single phase input 85 to 264VAC
- Regulated single outputs 12V, 24V & 48VDC
- Medical safety approvals (-M versions)
- Variable fan speed to reduce audible noise
- AC OK, DC OK & inhibit
- Fault & overtemperature signals
- SEMI F47 compliant
- 5VDC standby
- -20°C to +70°C operation
- 3 year warranty

Applications

Healthcare

Industrial electronics

Semiconductor manufacturing

Technology

Dimensions

323.9 x 101.6 x 43.2mm (12.75” x 4.00” x 1.70”)

More resources

Click the link or scan the code

→ xppower.com

Models & ratings

Model number(1)	Output power(2)	Output voltage V1	Voltage Adjust V1	Output current V1		Standby Supply V2
				<180VAC	>180VAC	
HPU1K5PS12	1.2kW	12.0VDC	11-14VDC	100A	100A	5VDC/1A
HPU1K5PS24	1.5kW	24.0VDC	22-28VDC	50A	63A	5VDC/1A
HPU1K5PS48	1.5kW	48.0VDC	45-52VDC	25A	31A	5VDC/1A

Notes:

1. For medical version, add suffix ‘-M’ to model number.
2. See derating curves.

HPU1K5 series

Input

Characteristic	Minimum	Typical	Maximum	Units	Notes & conditions
Input voltage	85		264	VAC	See derating curve
Input frequency	47		63	Hz	
Power factor		>0.9			
Input current		13/6.5		A	115/230VAC
Inrush current		35		A	264VAC
Earth leakage current			1.1	mA	264VAC, 60Hz
			<300	µA	264VAC (-M version)
Input protection	Internal T20A/250 VAC fuse in line and neutral				

Output

Characteristic	Minimum	Typical	Maximum	Units	Notes & conditions
Output voltage	See models and ratings table				
Output voltage trim	Via potentiometer or external voltage, see model tables				
Initial set accuracy		±1		%	Of nominal with 50% load
Minimum load	0			A	No minimum load required
Start up delay		1		s	
Line regulation			±0.5	%	
Load regulation			±0.5	%	V1
			±5.0		V2
Transient response		4		%	Deviation recovery to within 2% in 500µs for 50-75-50% load change
Ripple & noise			1	% max pk-pk	24-48V models, 20MHz bandwidth
			2		12V models, 20MHz bandwidth
			3		V standby, 20MHz bandwidth
Overvoltage protection	115		140	%	V1 nominal, recycle input
Overtemperature protection	Protects the unit against overtemperature, auto restart				
Overcurrent protection	110		140	%	V1, V Standby power limited
Temperature coefficient			0.02	%/°C	After 20 minute warm up
Short circuit protection	Continuous, trip and restart (hiccup mode)				
Remote sense	Compensates for 0.5V total drop				
Current share	Share upto 8 units maximum, units share current within 10% of each other at full load.				

General

Characteristic	Minimum	Typical	Maximum	Units	Notes & conditions
Efficiency		90		%	
Isolation: Input to output	4000			VAC	2 x MOPP
Input to ground	1500			VAC	1 x MOPP
Output to ground	500			VDC	
Switching frequency		70		kHz	PFC
		130			Main converter
Power density			45.72 (18.0)	W/cm^3 (W/in^3)	
MTBF		470		khrs	Telecordia SR-332 at 25°C, GB
Signals	AC OK, DC OK, Inhibit, Fault at 25 °C, GB				

Environmental

Characteristic	Minimum	Typical	Maximum	Units	Notes & conditions
Operating temperature	-20		+70	°C	Derate linearly from +50°C at 2.5%/°C to 50% load at +70°C
Cooling	Internal load dependant variable speed fans				
Humidity		95		%RH	RH, non-condensing
Operating altitude			3000	m	
Shock	±3 shocks in each axis (total 18 shocks) 30 g 11 ms (half sine). Compliant with EN60068-2-27.				
Vibration	2 g 10-500 Hz 10 sweeps. Compliant with EN60068-2-6.				

EMC: emissions

Phenomenon	Standard	Test level	Notes & conditions
Conducted	EN55011/EN55032	A	
Radiated	EN55011/EN55032	A	
Harmonic currents	EN61000-3-2	Class A	(Class C for loads ≥10%)
Voltage flicker	EN61000-3-3		

EMC: immunity

Phenomenon	Standard	Test level	Criteria	Notes & conditions
ESD immunity	EN61000-4-2	4	A	
Radiated immunity	EN61000-4-3	3	A	
EFT/Burst	EN61000-4-4	3	A	
Surge	EN61000-4-5	Installation class 3	A	SEMI F47
Conducted	EN61000-4-6	3	A	
Dips and interruptions	EN61000-4-11	30%, 10ms	A	
		60%, 100 ms	B	
		100%, 5000ms	B	
	EN60601-1-2	30%, 500ms	A	
		60%, 100ms	A	
		100%, 10ms	A	
		100%, 5000ms	B	
	SEMI F47-0706	>200VAC input	A	

Safety approvals

Certification	Safety standard	Notes & conditions
CB report	IEC60950-1:2005 Ed 2	
	IEC62368-1:2014	
UL	UL 62368-1 & CAN/CSA C22.2 No. 62368-1-14	
	ANSI/AAMI ES60601-1, CSA22.2 No.60601-1 per cUL, Including Risk Management	
EN	EN62368-1 2014/A11:2017	
	EN60601-1	
CE	Meets all applicable directives	
UKCA	Meets all applicable legislation	

Derating curves

Thermal Derating Curve

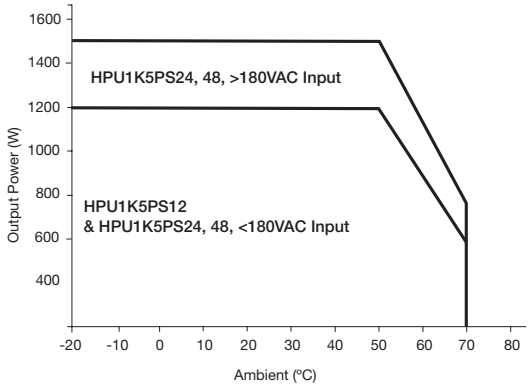

Input Derating Curve

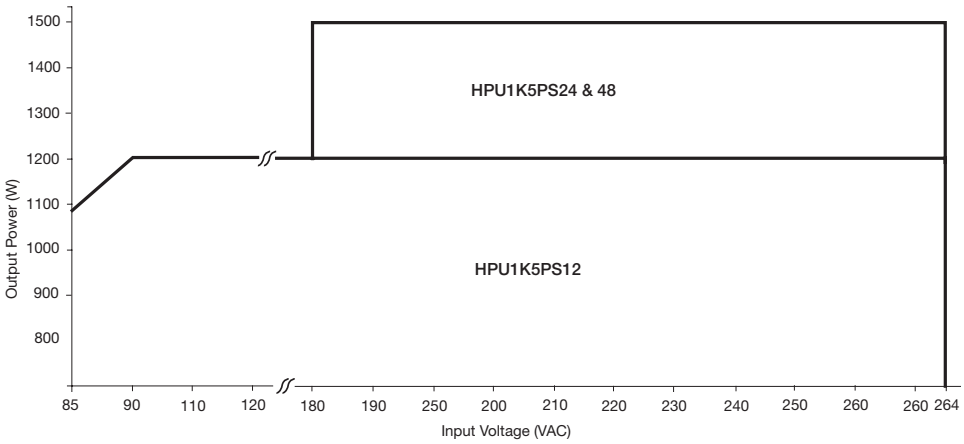

Signals & controls

AC OK/Power Fail

AC OK is an isolated signal providing a minimum of 3ms warning of loss of output regulation. The signal is fully isolated and the collector and emitter must be connected externally.

Maximum sink current 2mA, maximum voltage 20V.

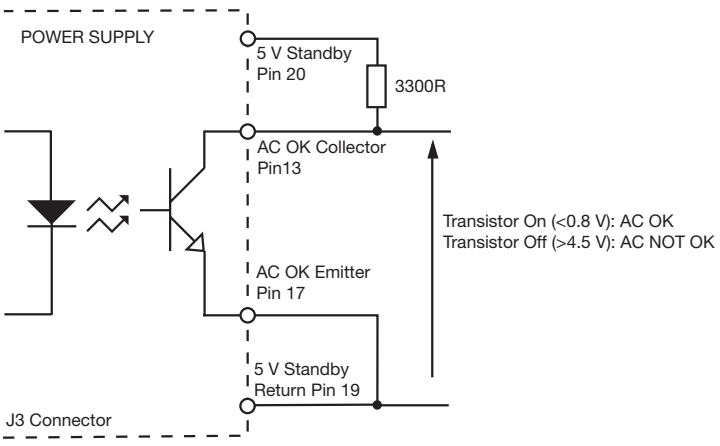

DC OK

DC OK is an isolated signal providing warning that the output voltage has fallen below 90% of nominal. The signal is fully isolated and the collector and emitter must be connected externally.

Maximum sink current 2mA, maximum voltage 20V.

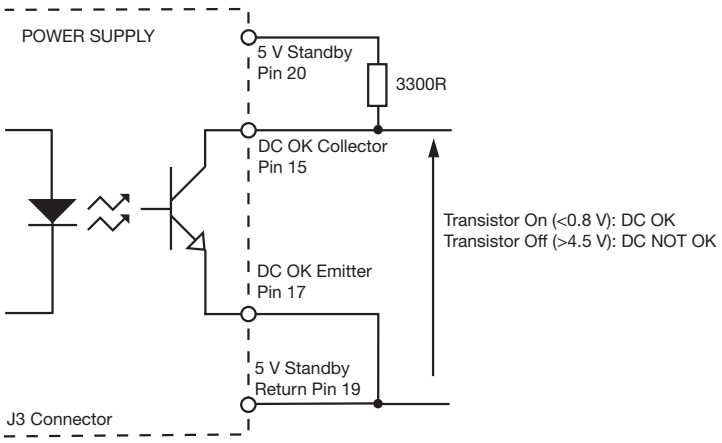

Signals & controls

Inhibit

Inhibit is an isolated control signal which can turn the power supply and fans off by supplying 2 to 5mA into the pin.

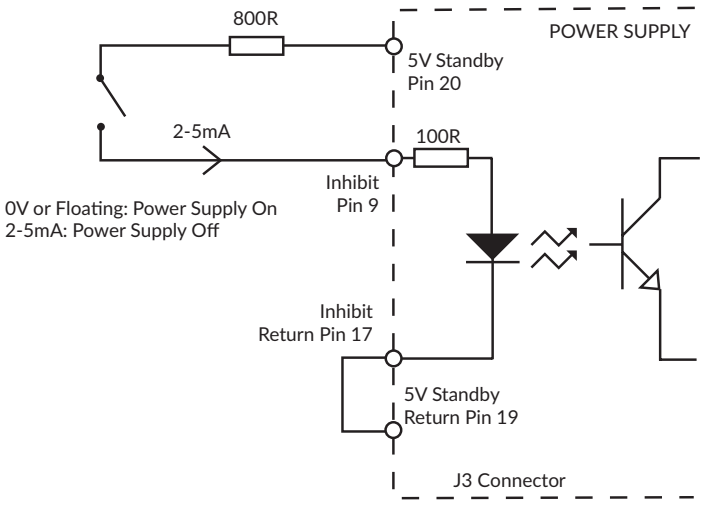

Fault

Fault is an isolated signal providing warning of either Power Fail or DC fail. The signal is fully isolated and the collector and emitter must be connected externally.

Maximum sink current 2mA, maximum voltage 20V.

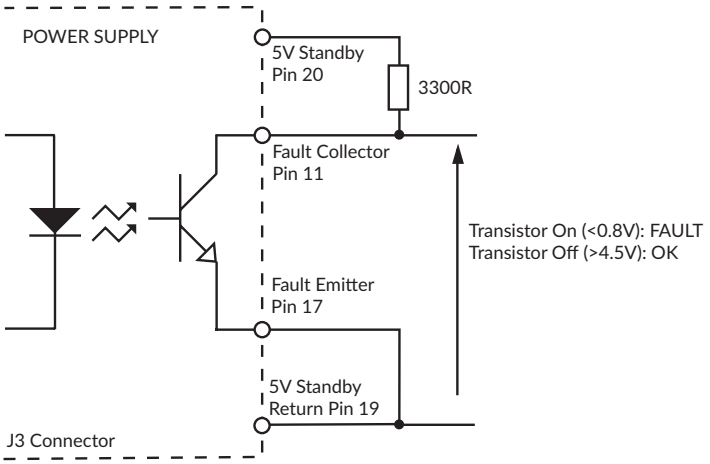

V Program

V Program allows remote voltage adjustment within the range ±10%

V Program	V Output
0V	-10%
5V	+10%
Open Circuit	Factory set voltage

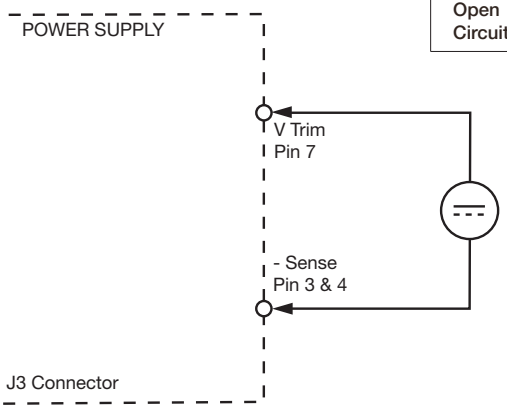

Current Share

Connecting pins 5 or 6 and 3 or 4 of like voltage units (8 maximum) will force the current to share between the outputs. Units share current within 10% of each other at full load. Derate output to 90% of total combined load.

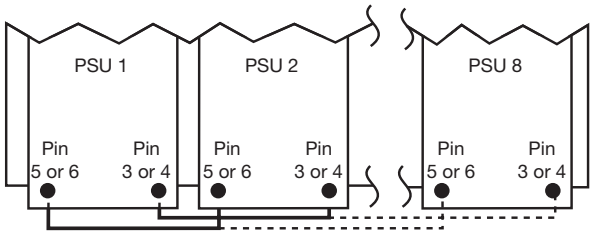

Signals & controls

Parallel Load & Current Share Connections

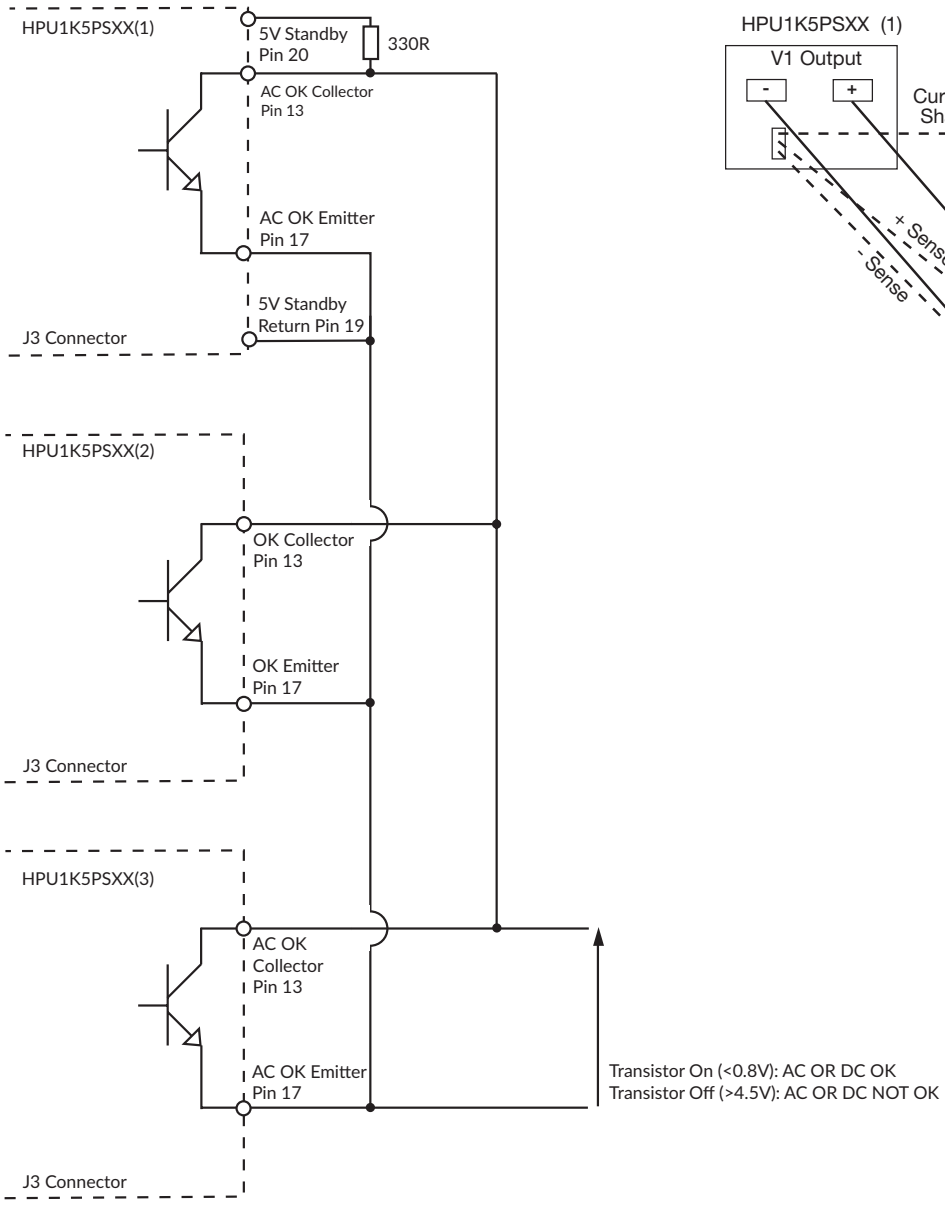

Parallel Load & Current Share Connections

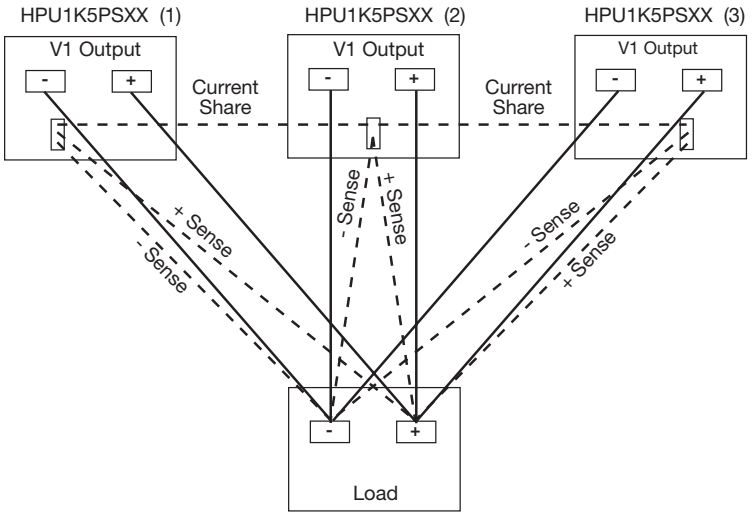

Mechanical details

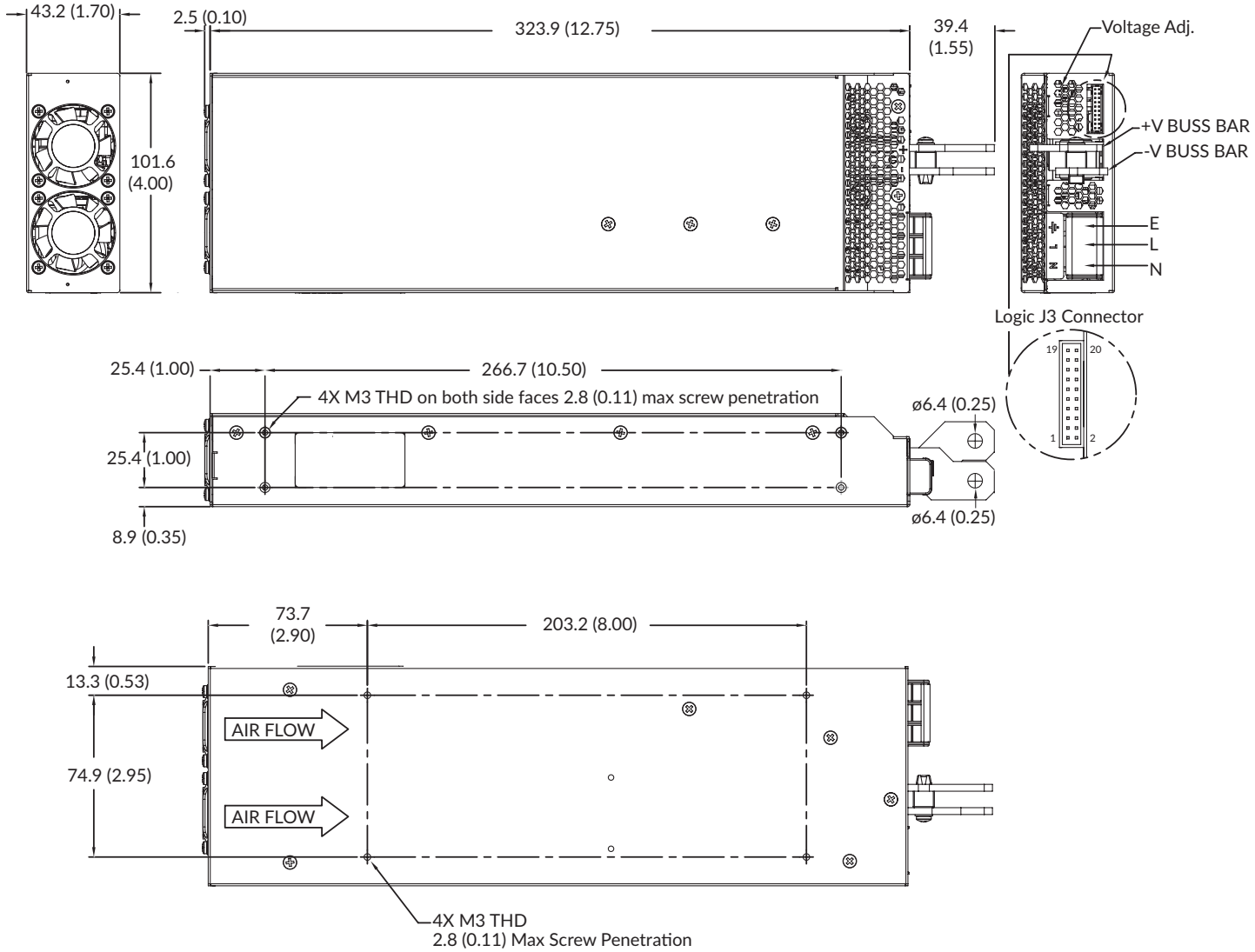

Logic Connector: J3, JST, PN S20B-PHDSS (LF) SN)					
Pin	**Function**	**Pin**	**Function**	**Pin**	**Function**
1	+ Sense	8	NC	15	DC OK
2	+ Sense	9	Inhibit	16	NC
3	- Sense	10	NC	17	Signal GND
4	- Sense	11	Fault	18	NC
5	Current Share	12	NC	19	5V Standby Rtn (V2)
6	Current Share	13	AC OK	20	5V Standby (V2)
7	V Trim	14	NC		

Mates with JST PN PHDR-20VS, Crimp contacts JST PN SPHD-00IT-P0.5

Notes:

1. All dimensions are in mm (inches).
2. Weight 2.35kg (5.2lb)

Specifications subject to change without notice.